ANCAP
SAFETY

ANCAP Test Protocol.

Mobile Progressive Deformable Barrier Frontal Impact v1.1

JANUARY 2020

PREFACE

During the test preparation, vehicle manufacturers are encouraged to liaise with ANCAP and to observe the way cars are set up for testing. Where a vehicle manufacturer feels that a particular feature should be altered, they should raise this with the ANCAP assessor present at the test, or in writing to the ANCAP Chief Executive Officer if no assessor is present. ANCAP will consider the matter and at their sole discretion and give direction to the test facility.

Vehicle manufacturers warrant not to, whether directly or indirectly, interfere with testing and are forbidden from making changes to any feature that may influence the test, including but not limited to dummy positioning, vehicle setting, laboratory environment etc.

Illustrations in this protocol are reproduced from Euro NCAP publications, and therefore show Euro NCAP markings on left-hand-drive vehicles. Where relevant, the layouts depicted should be adapted to right-hand-drive application.

VERSION	PUBLISHED	DETAILS
1.0	February 2019	First version of ANCAP protocol.
1.1	July 2019	Amended section 9 to refer to Rescue Protocol for after test assessment.

© COPYRIGHT ANCAP 2019

This work is the intellectual property of ANCAP with certain content reproduced with the permission of Euro NCAP. A licence is granted for this material to be shared for non-commercial, educational purposes, provided this copyright statement appears on the reproduced materials and notice is given that the copying is by permission of ANCAP. To disseminate otherwise or to republish will be considered a breach of intellectual property rights.

DISCLAIMER.

ANCAP has taken all reasonable care to ensure that the information published in this protocol is accurate and reflects the current technical decisions taken by the organisation. In the event this protocol contains an error or inaccuracy, ANCAP reserves the right to make corrections and determine the assessment and subsequent result of the affected requirement(s).

AUSTRALASIAN NEW CAR ASSESSMENT PROGRAM (ANCAP)

TESTING PROTOCOL – MPDB Frontal Impact

Table of Contents Page No.

1 VEHICLE PREPARATION 1
1.1 Unladen Kerb Mass 1
1.2 Reference Loads 1
1.3 Vehicle Width and Overlap 2
1.4 Vehicle Preparation 2
2 INTRUSION MEASUREMENTS 4
2.2 Before Test 4
2.3 After Test 5
3 DUMMY PREPARATION AND CERTIFICATION 8
3.1 General 8
3.2 THOR dummy certification 8
3.3 THOR Dummy preparation 8
3.4 THOR Dummy Test Condition 8
3.5 Hybrid III Dummy Certification 9
3.6 Additions and Modifications to the Hybrid III Dummy 10
3.7 Hybrid III Dummy Clothing and Footwear 10
3.8 Hybrid III Dummy Test Condition 10
3.9 Dummy painting and marking 10
3.10 Post Test Dummy Inspection 12
4 INSTRUMENTATION 13
4.1 THOR Dummy Instrumentation 13
4.2 Hybrid III Dummy Instrumentation 14
4.3 Vehicle Instrumentation 15
4.4 Trolley and Barrier Instrumentation 16
5 PASSENGER COMPARTMENT ADJUSTMENT 17
5.1 Overview of Settings 17
5.2 Determination of and Setting the Fore/Aft, Tilt and Lumbar Settings of Seat 18
5.3 Setting the Steering Wheel Horizontal Adjustment 19
5.4 Setting the Steering Wheel Vertical Adjustment 19
5.5 Marking Q10 & Q6 Child Dummy Head Excursion 19
5.6 Marking the Cr-Point 19
6 DUMMY POSITIONING AND MEASUREMENTS 20
6.1 Determine the H-point location with the H-Point machine 20
6.2 Determine the H-point of the Passenger's Seat 21
6.3 Adult Dummy Placement 21
6.4 THOR Dummy Positioning 21
6.5 Passenger Dummy Placement 24
6.6 Child Restraint System (CRS) Installation and Child Dummy Placement 25
6.7 Dummy Positioning Measurements 25
7 BARRIER AND TROLLEY 27
7.1 Trolley Preparation 27
8 BARRIER FACE MEASUREMENT 29
8.1 Before Test 29
8.2 After Test 30
9 TEST PARAMETERS 34
9.1 Test set-up 34

9.2 Impact Speed 34
9.3 Post-Impact Braking 34
9.4 Impact Angle 34
9.5 Alignment 34
9.6 After Test 35
9.7 Dummy Removal 35

1 VEHICLE PREPARATION

1.1 Unladen Kerb Mass

1.1.1 The capacity of the fuel tank will be specified in the manufacturer's booklet. This volume will be referred to throughout as the "fuel tank capacity".

1.1.2 Syphon most of the fuel from the tank and then run the car until it has run out of fuel.

1.1.3 Calculate the mass of the fuel tank capacity using a density for petrol of 0.745g/ml or 0.840g/ml for diesel. Record this figure in the test details.

1.1.4 Refill the tank with fuel, water or other ballast to this mass.

1.1.5 Check the oil level and top up to its maximum level if necessary. Similarly, top up the levels of all other fluids to their maximum levels if necessary.

1.1.6 Ensure that the vehicle has its spare wheel on board along with any tools supplied with the vehicle. Nothing else should be in the car.

1.1.7 Ensure that all tyres are inflated according to the manufacturer's instructions for half load.

1.1.8 Measure the front and rear axle weights and determine the total weight of the vehicle. The total weight is the 'unladen kerb mass' of the vehicle. Record this mass in the test details.

1.1.9 Measure and record the ride heights of the vehicle at all four wheels.

1.2 Reference Loads

1.2.1 Calculate 10 percent of the fuel tank capacity mass as determined in 1.1.3.

1.2.2 Remove this mass of ballast from the fuel tank, leaving 90 percent of the mass in the tank.

1.2.3 Place both front seats in their mid positions. If there is no notch at this position, set the seat in the nearest notch rearward (this will be done more accurately in Section 5).

1.2.4 Place an 80kg mass on each of the front seats representing driver and passenger occupants.

1.2.5 Place 50kg in the luggage compartment of the vehicle. The normal luggage compartment should be used, i.e. rear seats should not be folded to increase the luggage capacity. Spread the weights as evenly as possible over the base of the luggage compartment. If the weights cannot be evenly distributed, concentrate weights towards the centre of the compartment.

1.2.6 In the child restraints to be used for testing, place masses equivalent to Q6 and Q10 child dummies on the second row seats behind the driver seat and passenger seat respectively (23kg and 36kg). If the child restraints are not available at this time then a default mass of 7kg should be added to each dummy mass.

1.2.7 For two seater vehicles only, the mass of child dummies and child seats shall not be included in the reference load. For vehicles with limited rear space, child seats and dummies shall be included in the reference load.

1.2.8 Roll the vehicle back and forth to 'settle' the tyres and suspension with the extra weight on board. Weigh the front and rear axle weights of the vehicle. These loads

are the “axle reference loads” and the total weight is the “reference mass” of the vehicle.

1.2.9 Record the axle reference loads and reference mass in the test details.

1.2.10 Measure and record the ride heights of the vehicle at the point on the wheel arch in the same transverse plane as the wheel centres. Do this for all four wheels.

1.2.11 Remove the weights from the luggage compartment and from the front and rear seats.

1.3 Vehicle Width and Overlap

1.3.1 Determine the widest point of the vehicle ignoring the rearview mirrors, side marker lamps, tyre pressure indicators, direction indicator lamps, position lamps, flexible mud-guards and the deflected part of the tyre side-walls immediately above the point of contact with the ground.

1.3.2 Record this width in test details.

1.3.3 Determine the centreline of the vehicle and mark a line on the bonnet and bumper on the centreline of the car.

1.4 Vehicle Preparation

Care should be taken during vehicle preparation that the ignition is not switched on with the battery or airbag disconnected. This will result in an airbag warning light coming on and the airbag system will need to be reset.

1.4.1 Ensure that the vehicle’s battery is connected to the vehicle’s electrical circuit in its standard position. Check that the dashboard light for the airbag circuit functions as normal. Alternatively, the vehicle battery acid may be drained or an additional live battery may be placed in the luggage compartment of the vehicle. If the supply from the drained battery is not supported by an additional battery, the test must be conducted within fifteen minutes after draining the battery. Where any additional battery is used it must be connected directly to the original battery so that the vehicle’s original electrical system, cable routing and connections remain unaltered. The power cables connecting both batteries must be positioned on the non-struck side of the car in such a way to minimise the risk of the cable being cut during the impact. The cable used to connect both batteries must have a minimum cross section of $5mm^2$ to ensure a minimum voltage drop. The current supplied to the vehicle must be monitored throughout the impact across the original battery. Where an additional battery is to be used the vehicle manufacturer will be required to indicate the minimum voltage/current needed during the test for all systems to operate as intended. The manufacturer will be asked to confirm that the laboratory modifications are suitable for use in the vehicle being tested and will not influence any of the vehicle systems.

1.4.2 If the engine fluids are to be drained then drain the coolant, oil, air-conditioning (air conditioning refrigerant should be drained without venting it to the atmosphere) and Power Assisted Steering (PAS) fluids.

1.4.3 If the fluids are drained then measure the weights of each of these fluids, excluding the air conditioning fluid, and replace with an equivalent weight of water or other ballast.

1.4.4 Remove the luggage area carpeting, spare wheel and any tools or jack from the car.

The spare wheel should only be removed if it will not affect the crash performance of the vehicle.

1.4.5 An emergency abort braking system may be fitted to the vehicle. This is optional; the test facility may elect to test without an abort system. Where such a system is fitted its inclusion shall not influence the operation or function of any of the foot controls, in particular the brake pedal. The position and the resistance to movement of the pedals shall be the same as prior to fitment of the system. Remove as little as possible of the interior trim; any mass compensation will be made when all equipment has been fitted.

1.4.6 Fit the on-board data acquisition equipment in the boot of the car. Also fit any associated cables, cabling boxes and power sources.

1.4.7 Place an 80kg mass on each of the front seats with the seats in their test positions.

1.4.8 In the child restraints to be used for testing, place masses equivalent to Q6 and Q10 child dummies on the second row driver's seat and passenger seat respectively (23kg and 36kg). If the child restraints are not available at this time then a default mass of 7kg should be added to each dummy mass.

1.4.9 Weigh the front and rear axle weights of the vehicle. Compare these weights with those determined in Section 1.2.8.

1.4.10 If the axle weights differ from those measured in Section 1.2.8 by more than 5% (of the axle reference loads) or by more than 20kg, remove or add items which do not influence the structural crash performance of the vehicle. Similarly, if the total vehicle mass differs by more than 25kg from the reference mass, non-structural items may be removed or added. The levels of ballast in the fuel tank (equivalent in mass to 90% capacity of fuel) may also be adjusted to help achieve the desired axle weights. Any additional mass that is added to the vehicle should be securely and rigidly attached.

1.4.11 Repeat Sections 1.4.10 and 1.4.10 until the front and rear axle weights and the total vehicle weight are within the limits set in 1.4.10. Record the final axle weights in the test details.

1.4.12 For fully electric vehicles, if a total vehicle mass within 25kg of the reference mass cannot be achieved, it is acceptable for the total mass to be within 2% of the reference mass. A heavier test mass may be used with the agreement of the OEM, the test mass must not be below the minimum value of the specified tolerances.

1.4.13 The vehicle manufacturer will be required to inform ANCAP and the test laboratory of the presence of any pre-crash systems that must be disabled prior to impact. Disabling information shall be provided to the laboratory prior to impact. It is the responsibility of the vehicle manufacturer to ensure that the disconnection of the system does not influence the performance of any systems that are intended to function during the impact.

2 INTRUSION MEASUREMENTS

For vehicle deformation and intrusion measurements a 3D measuring system which is capable of recording three dimensional co-ordinates of a point in space can be used. A tolerance of +/- 1mm is applicable to such a system. The system requires an axis system to be set up relative to the object to be measured, typically the transverse, longitudinal and vertical directions of a vehicle. An origin is first needed, followed by a point on the positive x axis and then a point in the positive x-y plane. Since the front of the vehicle is highly deformed after the impact, it is simplest to use some structure at the rear of the vehicle as a reference for measurement; this obviates the need to level the car after testing, the accuracy of which is limited. Most of the procedure which follows relates to the setting up of these axes.

2.1 Before Test

2.1.1 Determine and mark the centre of the clutch, brake and accelerator pedals.

2.1.2 Set the steering wheel to its mid-position, if it is adjustable for either rake or reach, for full description of how to do this, see Section 5.

2.1.3 Remove the centre of the steering wheel or, if fitted, the airbag assembly to expose the end of the steering column. When doing this, carefully note the connections to the airbag which will need to be remade on re-assembly. Follow the manufacturer's instructions when removing the airbag and/or steering wheel assemblies.

2.1.4 Determine and mark the centre of the top of the steering-column.

2.1.5 Remove the carpet, trim and spare wheel from the luggage compartment. The plastic trim or rubber seals that might influence the latching mechanism should be re-fitted once the intrusion measurements have been recorded. This is to ensure that any opening of the rear door during the impact is not caused by the omission of some part of the trim around the latching mechanism.

2.1.6 Where available, apply the manufacturer’s co-ordinate system onto the vehicle so that three defined locations are established.

2.1.7 Alternatively, locate the vehicle axis reference frame centrally to the rear of the vehicle, see Figure 1.

Figure 1 Setting up axis reference frame

2.1.8 Level the reference frame.

2.1.9 Measure and record the stud heights of the reference frame. These will be used after the test to help reset the reference frame, if required.

2.1.10 If it is necessary to lean on the vehicle to reach the following points, the vehicle should be supported to maintain the ride heights during measuring.

2.1.11 Set up the vehicle co-ordinate axes in the 3D arm or similar device.

2.1.12 Mark and record the position of at least 5 datum points on the rear of the vehicle. These points should be on structures which are not expected to be deformed in the test and should be positioned such that they have wide spaced locations in three dimensions and can all be reached with the 3D measuring system in one position.

2.1.13 Working on the passenger side of the vehicle determine and mark the positions on the B-post which are:

a) at a distance of 100 mm above the sill.

b) at a distance of 100 mm beneath the lowest level of the side window aperture.

All points should be as close as possible to the rubber sealing strip around the door aperture.

2.1.14 Measure and record the pre-impact positions of the two door aperture points.

2.1.15 Working on the driver's side of the vehicle determine and mark the positions on the A and B posts which are:

a) at a distance of 100 mm above the sill.

b) at a distance of 100 mm beneath the lowest level of the side window aperture.

All points should be as close as possible to the rubber sealing strip around the door aperture.

2.1.16 Use the arm to measure the pre-impact positions of the centre of the top of the steering-column and the four door aperture points.

2.1.17 Record the position of the centre of the un-depressed clutch, brake and accelerator pedals and where applicable foot operated parking brake. If the pedal is adjustable, set it to the mid position or a reasonable variation from this in accordance with the manufacturer's recommendations for the 5th percentile position.

2.1.18 Replace the steering wheel and airbag assembly. Check that all bolts are securely fastened. Ensure that all connections to the airbag are replaced and check the dashboard light to confirm the circuit is functional.

2.2 After Test

2.2.1 Before dummy removal measure the distance between all foot pedals and a fixed point in the footwell, e.g. seat runner, seat mounting bolt. If access cannot be gained remove the dummies, according to Section 9.7, taking care not to disturb any pedals and then record the measurement. This measurement should be re-checked before the pedals are measured with the 3D measuring system. If the pedal has moved re-position the pedal using the measurement taken previously.

2.2.2 Remove the dummies according to Section 9.7 and remove the data acquisition and emergency abort equipment (if fitted) from the luggage compartment.

2.2.3 Remove the centre of the steering wheel or airbag assembly.

2.2.4 Use any 3 of the 5 datum points at the rear of the vehicle, and their pre-impact measurements, to redefine the measurement axes.

2.2.5 If the axes cannot be redefined from any three of the datum points relocate the axis reference frame in the same position as in Section 2.1.7. Set the studs of the frame to the same heights as in Section 2.1.9, see Figure 2. The frame should now be in the same position relative to the car as it was before impact. Set up the measurement axes from the frame.

2.2.6 Record the post-impact positions of the B-post points on the passenger's side of the vehicle.

2.2.7 Compare the vertical co-ordinate of the B-post sill point before and after the test.

2.2.8 Find the angle θ that best satisfies the following equation: $z = - x'\sin\theta + z'\cos\theta$ for the B-post sill point (where z = pre-impact vertical measurement and x′,z′ = post-impact longitudinal and vertical).

2.2.9 Record the post-impact co-ordinates of the centre of the steering column, the centre of the clutch, brake and accelerator pedals, and where applicable a foot operated parking brake, with no load applied to them and in the blocked position (loaded with 200N to produce the maximum moment about the pedal pivot), the door aperture points. Prior to the 'blocked' pedal measurement, i.e. with the 200N applied, the brake fluid shall be removed to avoid the build-up of hydraulic pressure. If the steering column has become detached during impact due to the operation of the shear capsules, the column should be repositioned before measurement in the upward and lateral directions so that it is in contact with whatever structure(s) last constrained it from further movement. If any of the foot pedals become detached do not take a measurement of that pedal.

2.2.10 Transform the post impact longitudinal and vertical measurements (x′,z′) using the following equations.

$$\begin{bmatrix} X' \\ Z' \end{bmatrix} = \begin{bmatrix} \cos\theta & \sin\theta \\ -\sin\theta & \cos\theta \end{bmatrix} \begin{bmatrix} x' \\ z' \end{bmatrix}$$

2.2.11 Where θ is the angle determined in Section 2.2.8. X and Z should now be in the same frame of reference as the pre-impact measurements, assuming that the point on the passenger's side B-post sill is not displaced vertically or laterally during the impact.

2.2.12 From the pre-impact and adjusted post-impact data collected, determine

a) the longitudinal, lateral and vertical movement of the centre of the top of the steering column.

b) the longitudinal and vertical movement of all of the foot operated pedals.

c) the rearward movement of the A-post at waist level.

d) the reduction in width of the door aperture at waist and sill levels.

2.2.13 Record these intrusion measurements in the test details.

Figure 2 Re-setting axis reference frame

3 DUMMY PREPARATION AND CERTIFICATION

3.1 General

3.1.1 A THOR 50th percentile male test dummy shall be used on the front driver's seat and shall conform to the specification detailed in Euro NCAP Technical Bulletin TB026.

3.1.2 A Hybrid III 50th percentile male test dummy shall be used on the front passenger's position. It shall conform to U.S. Department of Transportation, Code of Federal Regulations Part 572 Subpart E and ECE Regulation No. 94, except for modifications and additions stated later - See Section 3.6.

3.1.3 Details of the child dummy preparation and certification are contained in the ANCAP Child Occupant Protection Testing Protocol.

3.2 THOR dummy certification

Full details of the THOR certification requirements are available in the documents mentioned in Euro NCAP Technical Bulletin TB026. No manufacturer shall have access to any pre-test information regarding any of the test equipment to be used by ANCAP or be permitted to influence its selection in any way.

3.2.1 The THOR shall be re-certified after every THREE impact tests.

3.2.2 If an injury criterion reaches or exceeds its normally accepted limit (eg HIC of 700) then that part shall be re-certified.

3.2.3 If any part of a dummy is broken in a test then the part shall be replaced with a fully certified component.

3.2.4 Copies of the dummy certification certificates will be provided as part of the full report for a test.

3.3 THOR Dummy preparation

3.3.1 Instrumentation is to be fitted to the dummy in accordance with Section 4.1.

3.3.2 The THOR dummy shall be equipped with a modified spine box set to the 'slouched' position which is equivalent to +9°.

3.3.3 THOR neck shields shall not be used for the driver.

3.3.4 For H-point positioning, the tool defined in SBL-A shall be used.

3.3.5 THOR shall be clothed with formfitting cotton stretch pants which must not cover the dummy's knees. The torso shall be clothed with the jacket only.

3.3.6 The feet of the THOR shall be fitted with rubber soled shoes equivalent to those specified in MIL-S13192 rev P, size 11EEE.

3.4 THOR Dummy Test Condition

3.4.1 Dummy Temperature

3.4.1.1 The dummy shall have a stabilised temperature in the range of 19°C to 22°C.

3.4.1.2 A stabilised temperature shall be obtained by soaking the dummy in temperatures that are within the range specified above for at least 1 hour prior to the test.

3.4.1.3 Measure the temperature of the driver dummy for at least 5 hours before test at intervals not exceeding 10 minutes and not exceeding 5 minutes before test.

3.4.1.4 The dummy shall be equipped with onboard temperature sensor that is attached in accordance with ISO TR27957 to either the left or right hand side of rib 4.

3.4.1.5 A copy of the temperature readings is to be supplied as part of the standard output of the test.

3.4.2 Dummy Joints

3.4.2.1 Stabilise the dummy temperature by soaking in the required temperature range for at least 1 hour.

3.4.2.2 Set the torque on the shoulder screws to obtain a 1-2g holding force of the arm on its pivot.

3.4.2.3 For adjustable joints in the legs, the tensioning screw or bolt which acts on the constant friction surfaces shall be adjusted to obtain a 1-2g holding force.

3.4.2.4 The dummy joint stiffnesses shall be set as close as possible to the time of the test and not more than 24 hours before the test.

3.4.2.5 Maintain the dummy temperature within the permissible temperature range between the time of setting the limbs and up to a maximum of 10 minutes before the time of the test.

3.4.2.6 After switching on the data acquisition, the air inside the dummy and also the sensors may warm up whereas the dummy itself is still at a lower temperature. Such sudden temperature rises do not reflect the actual dummy temperature and may be ignored as long as they do not exceed a duration of 20 minutes.

3.5 Hybrid III Dummy Certification

Full details of the certification procedure for the Hybrid-III dummy are available elsewhere (see Part 572 Subpart E of US Department of Transportation Code of Federal Regulations), SAE J2856 and Annex 10 of ECE Regulation No. 94). No manufacturer shall have access to any pre-test information regarding any of the test equipment to be used by ANCAP or be permitted to influence its selection in any way.

3.5.1 The Hybrid-III dummies shall be re-certified after every THREE impact tests.

3.5.2 The chest shall be certified according to the frequency above and shall meet both the low speed thorax test as prescribed by SAE J2779, as well as the full certification test detailed in CFR572. Additionally, chest potentiometer calibration and polynomial post processing shall also be performed as detailed in SAE J2517. See Euro NCAP Technical Bulletin TB005 for more details.

3.5.3 The knee slider shall be certified to SAE J2876 after every THREE impact tests and as specified in SAE J2856 after every NINE impact tests. See Euro NCAP Technical Bulletin TB006 for more details.

3.5.4 If an injury criterion reaches or exceeds its normally accepted limit (eg HIC of 700) then that part of the dummy shall be re-certified.

3.5.5 If any part of a dummy is broken in a test then the part shall be replaced with a fully certified component.

3.5.6 Copies of the dummy certification certificates will be provided as part of the full report

for a test.

3.6 Additions and Modifications to the Hybrid III Dummy

The additions and modifications which will change the dynamic behaviour of the test dummies from Part 572E specification dummies are:

3.6.1 Instrumentation is to be fitted to the dummy in accordance with Section 4.2.

3.6.2 Roller ball-bearing knees shall be fitted.

3.6.3 A foam neck shield (Part 93051-1-DN or equivalent) must be fitted to the passenger if a frontal protection airbag is present.

3.7 Hybrid III Dummy Clothing and Footwear

3.7.1 The Hybrid III shall be clothed with formfitting cotton stretch garments with short sleeves and pants which must not cover the dummy's knees.

3.7.2 The Hybrid III shall be fitted with rubber soled shoes equivalent to those specified in MIL-S13192 rev P, size 11EEE.

3.8 Hybrid III Dummy Test Condition

3.8.1 Dummy Temperature

3.8.1.1 The passenger dummy shall have a stabilised temperature in the range of 19°C to 22°C.

3.8.1.2 A stabilised temperature shall be obtained by soaking the dummy in temperatures that are within the range specified above for at least 1 hour prior to the test.

3.8.1.3 Measure the temperature of the driver dummy for at least 5 hours before test at intervals not exceeding 10 minutes and not exceeding 5 minutes before test.

3.8.1.4 A printout of the temperature readings is to be supplied as part of the standard output of the test.

3.8.2 Dummy Joints

3.8.2.1 All constant friction joints shall have their 'stiffness' set by the following method.

3.8.2.2 Stabilise the dummy temperature by soaking in the required temperature range for at least 5 hours.

3.8.2.3 The tensioning screw or bolt which acts on the constant friction surfaces shall be adjusted until the joint can just hold the adjoining limb in the horizontal. When a small downward force is applied and then removed, the limb should continue to fall.

3.8.2.4 The dummy joints stiffness shall be set as close as possible to the time of the test and not more than 24 hours before the test.

3.8.2.5 Maintain the dummy temperature within the range 19º to 22ºC between the time of setting the limbs and up to a maximum of 10 minutes before the time of the test.

3.9 Dummy painting and marking

3.9.1 The adult dummies shall have masking tape placed on the areas to be painted using the sizes detailed below. The tape shall be completely covered with the

following coloured paints. The paint shall be applied close to the time of the test to ensure that the paint will still be wet on impact. Child dummy painting is detailed in the ANCAP COP testing protocol.

Driver & passenger

Eyebrows (left and right)	Red
Nose	Green
Chin	Yellow
Left Knee	Red
Right Knee	Green
Left Tibia (top to bottom)	Blue, Green, Red, Yellow
Right Tibia (top to bottom)	Yellow, Red, Green, Blue

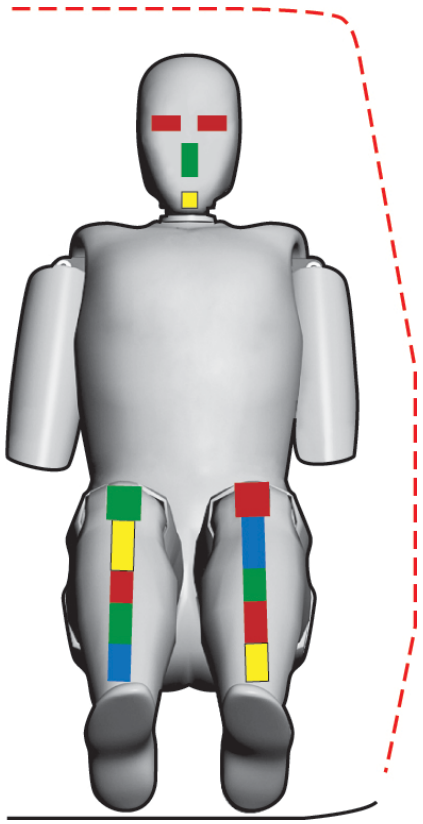

Paint Area Sizes:

Eyebrow	25 x 100mm, single strip with lower edge at the same height as headskin moulding hole on side of head.
Nose	25 x 40mm strip, vertically down nose centre line beneath eyebrow.
Chin	25 x 25mm square, centre line of chin.
Knee (L/R)	45 x 45mm square, knee centre line with bottom edge level with top of tibia flesh.
Tibia (L/R)	25mm x 50mm, 4 adjacent areas down leg centre line with top edge level with top of tibia flesh.

3.10 Post Test Dummy Inspection

3.10.1 All dummies shall be visually inspected immediately after the test.

3.10.2 Any lacerations of the skin or breakages must be noted in the test details, a dummy may have to be re-certified in this case. Refer to Section 3.1.3.

3.10.3 Any screws that have become loose or detached shall be re-tightened to the required torque or replaced as necessary.

4 INSTRUMENTATION

The Channel Amplitude Class (CAC) for each transducer shall be chosen to cover the Minimum Amplitude listed in the table. In order to retain sensitivity, CACs which are orders of magnitude greater than the Minimum Amplitude may not be used. A transducer shall be re-calibrated if it reaches its CAC during any test. All instrumentation shall be re-calibrated after one year, regardless of the number of tests for which it has been used. A list of instrumentation along with calibration dates must be supplied as part of the standard results of the test. The transducers are mounted according to procedures laid out in SAE J211. The sign convention used for configuring the transducers is stated in SAE J211 (2007).

Details of the child dummy instrumentation is contained in the ANCAP Child Occupant Protection Testing Protocol.

4.1 THOR Dummy Instrumentation

4.1.1 The THOR dummy shall be instrumented to record the channels listed below, additional channels may be recorded.

4.1.2 Only in-dummy data acquisition systems are to be used.

4.1.3 The test laboratory must check that acetabulum sensor orientation and post processing is in accordance with the specification detailed in Euro NCAP TB021.

Location	**Parameter**		**Minimum amplitude**	**Driver No of channels**
Head	Acceleration, A_x A_y A_z		250g	3
	Angular rate sensor		4000deg/sec	3
	Tilt sensor, X Y		NA	2
Skull spring	Force		5kN	2
Upper Neck	Force	F_x F_y	9kN	2
		F_z	14kN	1
	Moment, M_x M_y M_z		290Nm	3
Neck	Tilt sensor, X Y		NA	2
T1	Acceleration, A_x A_y A_z		200g	3
T4	Acceleration, A_x A_y A_z		200g	3
Clavicle (L & R)	Force		10kN	8
Thorax	Compression, DC0		100mm	4
	Angle, Y Z		50deg	8
	Tilt Sensor, X Y		NA	2
Mid Sternum	Acceleration, A_x		200g	1

Abdomen	Compression, DC0	100mm	2
	Angle, Y Z	50deg	4
	Acceleration, A_x	200g	1
T12	Acceleration, A_x A_y A_z	200g	3
	Force, F_x F_y F_z	5kN	3
	Moment, M_x M_y	300Nm	2
	Tilt Sensor, X Y	NA	2
Pelvis	Acceleration, A_x A_y A_z	200g	3
	Tilt sensor, X Y	NA	2
ASIS (L & R)	Force, F_x,	9kN	2
	Moment, M_y	220Nm	2
Acetabulum (L & R)	Force, F_x F_y F_z	5kN	6
Femurs (L & R)	Force, F_x F_y F_z	20kN	6
	Moment, M_x M_y M_z	400Nm	6
Knees (L & R)	Displacement, D_{knee}	19mm	2
Upper Tibia (L & R)	Force, F_x F_z	12kN	4
	Moment, M_x M_y	400Nm	4
Lower Tibia (L & R)	Force, F_x F_z	12kN	4
	Moment, M_x M_y	400Nm	4
	Total Channels dynamic, (rate sensor)		**99**
	Tilt Sensors (static)		**10**

4.2 Hybrid III Dummy Instrumentation

4.2.1 The Hybrid III dummy to be used shall be instrumented to record the channels listed below, additional channels may be recorded.

Location	**Parameter**		**Minimum Amplitude**	**No of channels**
Head	Acceleration, A_x A_y A_z		250g	3
Neck	Force	F_x F_y	9kN	2
		F_z	14kN	1
	Moment, M_x M_y M_z		290Nm	3
Chest	Acceleration, A_x A_y A_z		150g	3
	Deflection, D_{chest}		100mm	1
Pelvis	Acceleration, A_x A_y A_z		150g	3

Lumbar Spine	Force, F_x F_z	5kN	2
	Moment, M_y	300Nm	1
Femurs (L & R)	Force, F_z	20kN	2
Knees (L & R)	Displacement, D_{knee}	19mm	2
Upper Tibia (L & R)	Force, F_x F_z	12kN	4
	Moment, M_x M_y	400Nm	4
Lower Tibia (L & R)	Force, F_x F_z	12kN	4
	Moment, M_x M_y	400Nm	4
	Total Channels		**39**

4.3 Vehicle Instrumentation

4.3.1 Remove carpet and the necessary interior trim to gain access to the sill directly below the B-post.

4.3.2 Securely attach a mounting plate for the accelerometer horizontally on to the sill, without adversely affecting seat belt retractors and/or pretensioners.

4.3.3 Fix the accelerometer to the mounting plate. Ensure the accelerometer is horizontal to a tolerance of ±1 degree and parallel to the X-axis of the vehicle.

4.3.4 Attach lightweight (<100g) seatbelt loadcells to the shoulder section of the driver and passenger seatbelts and to the shoulder section of the Q10 and Q6 shoulder seatbelts. The calibration procedure for the loadcells is detailed in Euro NCAP Technical Bulletin TB016.

4.3.5 Where the fitment of the shoulder belt loadcell significantly influences the natural position of the belt, the loadcell may be supported from above with the use of a weak non-metallic wire or thread.

4.3.6 Where loadcells are to be placed on any seatbelts equipped with pretensioners, ensure that the loadcell is placed far enough away from the D-loop to ensure there is no interaction as the pretensioner fires. Where any CRS lock-off does not allow the loadcell to be placed a sufficient distance from the D-loop do not attach the loadcell.

VEHICLE

Location	Parameter	Minimum Amplitude	No of channels
B-Post Driver's side	Acceleration, A_x A_y A_z	150g	3
B-Post Passenger side	Acceleration, A_x A_y A_z	150g	3
Driver Seatbelt Shoulder Section	Force, $F_{diagonal}$	16kN	1
Passenger Seatbelt Shoulder Section	Force, $F_{diagonal}$	16kN	1
Q10 Seatbelt shoulder section	Force, $F_{diagonal}$	16kN	1
Q6 Seatbelt shoulder section	Force, $F_{diagonal}$	16kN	1
Battery (including secondary batteries)	Supply voltage, V	15V	1
	Total Channels per Vehicle		**11**

4.4 Trolley and Barrier Instrumentation

TROLLEY

Location	Parameter	Minimum Amplitude	No of channels
Trolley C of G	Acceleration, A_x A_y A_z	150g	3
Trolley C of G Backup sensor	Acceleration, A_x A_y A_z	150g	3
	Total Channels		**6**

TOTAL CHANNELS

1x Driver	99
1x Passenger	39
1x Q10	30
1x Q6	13
1x Vehicle	11
1x Trolley	6
TOTAL	**198**

5 PASSENGER COMPARTMENT ADJUSTMENT

5.1 Overview of Settings

Adjustment	Required Setting	Notes	Methods
Seat fore/aft	Mid position between fully forward and 95th	May be set to first notch rearwards of mid position if not lockable at mid position	
Seat base tilt	Manufacturer's design position	Permissible up to mid position, otherwise lowest	
Seat height	Lowest position		
Torso angle	Manufacturer's design position	Otherwise 25° to vertical	Use SAE manikin.
Seat lumbar support	Fully retracted		
Front head restraint height & tilt	Mid locking position	As whiplash test position. If there is any interference with the rear of the dummy head, reposition the HR to obtain the largest possible distance to the dummy head.	See Section 6.2 Whiplash testing protocol.
Front seat belt anchorage (where adjustable)	Initially, manufacturer's 50th percentile design position	If no design position then set to mid position, or nearest notch upwards	
Steering wheel	Mid vertical and horizontal		
Rear seat fore/aft (where adjustable)	Manufacturer's design position	Where no details are provided in the handbook, set to mid	
Rear seat back angle (where adjustable)	Manufacturer's design position	Otherwise 25° to Vertical	Use SAE manikin.
Rear seat facing	Forwards		
Rear head restraint height & tilt	As recommended in vehicle handbook.	Where no details are provided in the handbook, set to mid or next lowest position for height and mid locking position for tilt. Must not interfere with child/CRS installation	See Section 6.2 Whiplash testing protocol.
Rear seat belt anchorage (where adjustable)	As recommended in vehicle handbook for CRS installation.	If no recommendation then set to mid-position, or nearest notch upwards.	
Arm-rests (Front seats)	Lowered position	May be left up if dummy positioning does not allow lowering	
Arm-rests (Rear seats)	Stowed position		
Side window glazing	Front - Lowered Rear - Lowered or Removed	This applies to opening windows only	
Gear change lever	In the neutral position		
Parking brake	Disengaged		
Pedals	Normal position of rest	Adjustable pedals in mid	
Doors	Closed, not locked	For automatic door locks, refer to the Rescue and Extrication protcol.	
Roof / sunroof	Lowered / open		
Sun visors	Stowed position		
Rear view mirror	Normal position of use		

Adjustments not listed will be set to mid positions or nearest positions rearward, lowest or outboard.

5.2 Determination of and Setting the Fore/Aft, Tilt and Lumbar Settings of Seat

Prior to manikin installation, set an initial driver and passenger seat position as follows:

- Seat track should be in its most rearward locking position.
- Seat height should be set to its lowest position.
- Seat tilt shall be set to the extreme of its range that puts the cushion angle closest to zero (horizontal).
- Cushion height should be set to its lowest position.
- Cushion tilt should be set to the extreme of its range that puts the cushion angle closest to zero (horizontal).
- Lumbar support should be set to its most rearward or least prominent position.
- Seat back, approximate design position.
- Upper seat back, if separately adjustable from the lower portion should be rotated fully rearward.
- Cushion extension should be set to its most rearward or least extended position.
- Side bolsters should be set to the widest position.
- Arm Rests should be set in the lowered position.
- Any other adjustments, fully retracted.

5.2.1 The manufacturer's seat fore/aft position which corresponds to the 95th percentile male seating position will have been provided. Where no 95th seating position is provided, the seat shall be positioned 90mm rearward of the fully forward position or in the mid travel position, whichever is more forward.

5.2.2 Place a mark on the moving part of seat runner close to the unmoving seat guide.

5.2.3 Move the seat to its most forward position of travel.

5.2.4 Mark the unmoving seat guide in line with the mark on the seat runner. This corresponds to the seat in its most forward position.

5.2.5 Move the seat to the position of its travel provided for the 95th percentile male.

5.2.6 Mark the unmoving seat guide in line with the mark on the seat runner. This corresponds to the 95th percentile male's seating position.

5.2.7 Measure the distance between the forwards and rearwards marks. Place a third mark on the seat guide mid-way between the forwards and rearwards marks.

5.2.8 Move the seat so that the mark on the seat runner aligns with the mark on the seat guide.

5.2.9 Lock the seat at this position. Ensure that the seat is fully latched in its runners on both sides of the seat. The seat is now defined as being at its 'mid seating position'. The vehicle will be tested with the seat in this position.

5.2.10 If the seat will not lock in this position, move the seat to the first locking position that is rear of the mid seating position. The vehicle will be tested with the seat in this position.

5.2.11 If the seat base is adjustable for tilt it may be set to any angle from the flattest up to its mid position according to the manufacturer's preference. The same seat tilt setting must be used for frontal and side impact.

5.2.12 If the seat back is adjustable for lumbar support it shall be set to the fully retracted position.

5.3 Setting the Steering Wheel Horizontal Adjustment

5.3.1 Choose a part of the facia that is adjacent to the steering column and can be used as a reference.

5.3.2 Move the steering wheel to the most forward position of its travel.

5.3.3 Mark the steering column in line with an unmoving part of the facia. This corresponds to the most forward travel of the steering wheel.

5.3.4 Move the steering wheel to the most rearwards position of its travel.

5.3.5 Mark the steering column in line with an unmoving part of the facia. This corresponds to the most rearwards travel of the steering wheel.

5.3.6 Measure the distance between the forwards and rearwards marks on the steering column. Place a third mark on the steering column mid-way between the forwards and rearwards marks. This corresponds to the centre of travel of the steering wheel.

5.3.7 Move the steering wheel so that the mark on the steering column aligns with the facia.

5.3.8 Lock the steering column at this position. The steering wheel is now in its mid-position of travel. The vehicle will be tested with the steering wheel in this position.

5.4 Setting the Steering Wheel Vertical Adjustment

5.4.1 A method that is in principle the same as Section 5.3 should be used to determine and set the steering wheel vertical adjustment to the mid position.

5.4.2 It is unlikely that the same part of the facia used during the setting procedures for the horizontal adjustments could be used for the vertical adjustment.

5.4.3 Care should be taken to avoid unintentional adjustment of the horizontal setting during the vertical adjustment procedure.

5.5 Marking Q10 & Q6 Child Dummy Head Excursion

5.5.1 If applicable, position the rear seats in accordance with the adjustments detailed in Section 5.1.

5.5.2 Install the H-point machine in accordance with the procedure detailed in Section 6.1.1 of the ANCAP Frontal Full Width Impact Testing Protocol. Mark the H-point location of the 5th female occupant on the vehicle.

5.5.3 The vehicle should be clearly marked on both sides to define a scale of at least 400-600mm (50mm increments) forward of the H-point location of the 5th female occupant. The intention is that these marks should be clearly visible on the high speed film. Markings shall be applied to the exterior top and waist level of the door as well as inside the car at waist level.

5.5.4 The 450mm and 550mm excursion lines shall be clearly distinguished from the other markings in some way, for example using a different colour. These lines shall also be marked on the vehicle in locations that are clearly visible to the onboard cameras. Alternatively, it is acceptable for the lines across the vehicle to be superimposed during post film processing.

6 DUMMY POSITIONING AND MEASUREMENTS

6.1 Determine the H-point location with the H-Point machine

If the seat is new and has never been sat upon, a person of mass 75 ± 10kg should sit on the seat for 1 minute twice to flex the cushions. The seat shall have been at room temperature and not been loaded for at least 1 hour previous to any installation of the machine.

Position the three-dimensional H-point manikin (i.e., H-point machine) specified in Society of Automotive Engineers (SAE) Surface Vehicle Standard J826, revised July 1995, Devices for Use in Defining and Measuring Vehicle Seating Accommodation in the seat as follows;

6.1.1 Set the seat back so that the seat back angle is as close as possible to the manufacturer's design angle for the H-point manikin, which must be reasonable for normal use. In absence of a recommendation, an angle of 25 degrees towards the rear from vertical will be used.

6.1.1.1 The driver and passenger seatback angle and seat base shall be set to the same position.

6.1.1.2 Where one seat is height adjustable and the other is fixed, the relative angle between the seat back and the ground should be the same for both seats.

6.1.1.3 Where both seats are adjustable, the manufacturer is asked to supply recommended settings. These should not differ from the nominal settings by more than a reasonable amount. In any of the above situations, the manufacturer may provide convincing information that the seat adjustments should be different from that specified here. If so the fully supported request to vary the set up should be made to the Secretariat.

6.1.2 Place a piece of muslin cloth on the seat. Tuck the edge of the cloth into the seat pan/back join, but allow plenty of slack.

6.1.3 Place the seat and back assembly of the H-point machine on the seat at the centre line of the seat.

6.1.4 Set the thigh and lower leg segment lengths to 401 and 414mm respectively.

6.1.5 Attach lower legs to machine, ensuring that the transverse member of the T-bar is parallel to the ground.

6.1.6 Place right foot on undepressed accelerator pedal, with the heel as far forwards as allowable. The distance from the centre line of the machine should be noted.

6.1.7 Place left foot at equal distance from centre line of machine as the right leg is from centre line. Place foot flat on footwell.

6.1.8 Apply lower leg and thigh weights.

6.1.9 Tilt the back pan forwards to the end stop and draw the machine away from the seat-back.

6.1.10 Allow the machine to slide back until it is stopped by contacting the seat back.

6.1.11 Apply a 10kg load twice to the back and pan assembly positioned at the intersection of the hip angle and a point just above the thigh bar housing.

6.1.12 Return the machine back to the seat back.

6.1.13 Install the right and left buttock weights.

6.1.14 Apply the torso weights alternately left and right.

6.1.15 Tilt the machine back forwards to a vertical position and while holding the T-bar rock the pan by 5 degrees either side of the vertical. The feet are NOT to be restrained during the rocking. After rocking the T-bar should be parallel to the ground.

6.1.16 Reposition the feet by lifting the leg and then lowering the leg so that the heel contacts the floor and the sole lies on the undepressed accelerator pedal.

6.1.17 Holding the T-bar to prevent the H-Point machine from sliding forward on the seat cushion, return the machine back to the seat back.

6.1.18 Check the lateral spirit level and if necessary apply a lateral force to the top of the machine back, sufficient to level the seat pan of the machine.

6.1.19 Adjust the seat back angle to the angle determined in 6.1.1, measured using the spirit level and torso angle gauge of the H-point machine. Ensure that the torso remains in contact with the seat back at all times. Ensure that the machine pan remains level at all times.

6.1.20 Measure and record in the test details the position of the H-point relative to some easily identifiable part of the vehicle structure

6.2 Determine the H-point of the Passenger's Seat

6.2.1 Follow the procedure for the determination of the driver's H-point ensuring that the distance from the centre line to the legs is the same as that used in the determination of the driver's H-point. For both right and left feet, place the feet flat on the floor.

6.3 Adult Dummy Placement

If the vehicle has only two side doors, it may be necessary to fit the child restraint systems and child dummies before setting up the dummies in the front seats.

6.3.1 Ensure that the seat is in the correct position as defined by Section 6.1.

6.3.2 Place the adult dummies in the seats with the torso against the seat back, the upper arms against the seat back and the lower arms and hands against the outside of the upper leg.

6.3.3 It is the intention that the dummy should not be left to sit directly on the seat for more than 6 hours prior to the test. It is not acceptable for the dummy to be left in the vehicle overnight or for a similarly lengthy period.

6.4 THOR Dummy Positioning

The seat settings shall not be adjusted for dummy positioning with the exception of the fore/aft travel to establish the knee gap where required. If the dummy cannot be positioned within the tolerances below after three attempts then it is to be placed as close to the tolerance limits as possible. Record this in the test details.

6.4.1 Arms

The driver's upper arms shall be adjacent to the torso as far as is possible.

6.4.2 Torso and shoulders

The driver's back shall be in contact with the seat back and the centre line of the dummy shall be lined up with the centre line of the seats. Push the shoulders of the dummy fully rearward by hand.

6.4.3 H-point

The dummy's H-point shall be within 13mm in Z and 13mm in X of a point 20mm upward and 20mm forwards of the H-point as determined in Section 6.1. Record the position of the dummy H-point in the test details.

6.4.4 Pelvic Angle

Measure the pelvic angle using the tilt angle sensor. Verify that the pelvic angle is 0°± 1° (X) and 33° ± 2.5° (Y). Record the measured angle in the test details.

6.4.5 Torso

Measure the torso angle using the upper thoracic tilt angle sensor. Verify that the angle is 0°± 1° (X) and ± 1° (Y) with respect to the manufacturers THOR torso design angle. The THOR torso angle might be different to the H-point manikin design angle. If there is no manufacturer's recommendation, record the measured angle in the test details.

6.4.6 If there are difficulties with dummy positioning, the H-point location shall be the priority followed by the pelvic angle and then the torso angle.

6.4.7 Hands

The driver's hands shall have their palms placed against the steering wheel at a position of a quarter to three. The thumbs should be lightly taped to the wheel for the test.

6.4.8 Head

Record the head angle in the test details.

6.4.9 Legs

If the knees are in contact with the facia or the gap is less than 30mm, move the dummy and seat rearwards until a gap of 30mm is achieved, or to the nearest notch rearwards. Record the new H-point location within the test details.

The upper legs shall be in contact with the seat cushion as far as possible. Set the initial distance apart of the outside metal surfaces of the knees of each dummy to 270mm ± 10mm. When the left foot is placed on a footrest or the right foot is positioned onto the accelerator pedal as described in 6.4.10 below, the initial distance between the knees may be ignored. The femur and tibia for each leg shall be as close as possible to a vertical plane.

6.4.10 Feet

The driver dummy's right foot shall rest on the undepressed accelerator pedal with the heel on the floor. To keep the upper and lower legs in the same vertical plane,

move the upper leg accordingly. If the foot cannot be placed on the pedal then it should be placed as far forwards as possible with the foot perpendicular to the lower tibia, in line with the centre line of the pedal. Position the left foot at equal distance from centre line of seat as the right leg is from centre line. The left foot should be placed as flat as possible on the toe-board parallel to the centre line of the vehicle. If a foot-rest or wheel arch is present place the foot fully on this rest providing a normal seating position can still be achieved. Keep the legs in the same vertical plane. The knee gap requirement of 270mm ± 10mm may be ignored in this case. Note the knee gap in the test details.

6.4.11 Seat belt

6.4.11.1 Where possible, initially position the upper seat belt anchorage in the manufacturers 50th percentile design position. If no design position is provided, set the adjustable upper seat belt anchorage to the mid-position or nearest notch upward.

6.4.11.2 Carefully place the seat belt across the dummy and lock as normal. It will be necessary to re-position the hands as described in Section 6.4.7.

6.4.11.3 Remove the slack from the lap section of the webbing until it is resting gently around the pelvis of the dummy. Only minimal force should be applied to the webbing when removing the slack. The route of the lap belt should be as natural as possible.

6.4.11.4 Place one finger behind the diagonal section of the webbing at the height of the dummy sternum. Pull the webbing away from the chest horizontally forward and allow it to retract in the direction of the D-loop using only the force provided by the retractor mechanism. Repeat this step three times, only.

6.4.11.5 After following the above steps, the seatbelt should lie in a natural position across the dummy sternum assembly and shoulder clavicle.

6.4.11.6 To check for a straight belt routing, a line laser could be used to visualise the optimal belt routing between D-loop and belt buckle. Position a line laser in front of the dummy in the vertical and longitudinal plane (e.g. on the steering wheel centre where this is in the same longitudinal plane as the vehicle seat) and align the laser line with D-loop and buckle. The belt should be routed parallel to this line provided a natural position across the dummy sternum and shoulder clavicle is maintained.

6.4.11.7 Where the belt is close to or in contact with the neck shield and the upper belt anchorage is adjustable, the anchorage should be lowered and steps 6.4.11.3 and 6.4.11.4 repeated.

6.4.11.8 Once the belt is positioned the location of the belt should be marked across the dummy chest to ensure that no further adjustments are made. Mark also the belt at the level of the D-loop to be sure that the initial tension is maintained during test preparation.

6.4.11.9 Measure the vertical distance between the dummy chin and the top of the diagonal webbing at the dummy centreline.

6.4.11.10 Measure the horizontal distance between the top of the diagonal webbing at the dummy centreline and the door/window.

6.4.11.11 Where the fitment of the shoulder belt loadcell (Section 4.3.4) significantly influences the natural position of the belt, the loadcell may be supported from

above with the use of a weak non-metallic wire or thread

6.4.11.12 If the vehicle is moved following the dummy positioning, verify that the dummy position has not changed. Detail any changes in the test report

6.4.11.13 If a test run is aborted and the vehicle is brought to a standstill using an emergency braking method, the dummy placement procedure shall be repeated.

6.5 Passenger Dummy Placement

6.5.1 H-point

The dummy's H-point shall be within 13mm in Z and 13mm in X of a point 6mm below the H-point as determined in Section 6.1. Record the position of the dummy H-point in the test details.

6.5.2 Pelvic Angle

The pelvic angle measurement gauge should read 0°±1° (X) and 22.5° ± 2.5° (Y) from the horizontal. Record the measured angles in the test details.

6.5.3 Head

The transverse instrumentation platform of the head shall be horizontal to within 2.5°

Levelling of the head shall be carried out in this order:

- Adjust the H-point within the limit (par. 6.5.1)
- Adjust the pelvic angle within the limits (par. 6.5.2)
- Adjust the neck bracket the minimum to ensure that the transverse instrumentation platform is level within limits.

Record the measured angle in the test details.

6.5.4 Arms

The passenger's arms shall be adjacent to the torso and in contact with the seat back.

6.5.5 Hands

The passenger's hands shall be placed with the palms in contact with the outside of the legs and the little finger in contact with the seat cushion.

6.5.6 Torso

The passenger's back shall be in contact with the seat back and the centre line of the dummy shall be lined up with the centre line of the seats.

6.5.7 Legs

The upper legs shall be in contact with the seat cushion as far as possible. The distance apart of the outside metal surfaces of the knees of each dummy shall be 270mm ± 10mm. The femur and tibia for each leg shall be as close as possible to a vertical plane.

6.5.8 Feet

The passenger dummy's feet shall be placed with the heel as far forwards as possible and the feet as flat as possible. Both feet shall be parallel to the centre line of the vehicle.

6.5.9 Seat belt

As detailed in Section 6.4.11.

6.6 Child Restraint System (CRS) Installation and Child Dummy Placement

The child dummy and CRS installation procedures are detailed in the ANCAP Child Occupant Protection Testing protocol.

6.7 Dummy Positioning Measurements

The following measurements are to be recorded prior to the test after the dummy settling and positioning procedures have been carried out, see Figure 3.

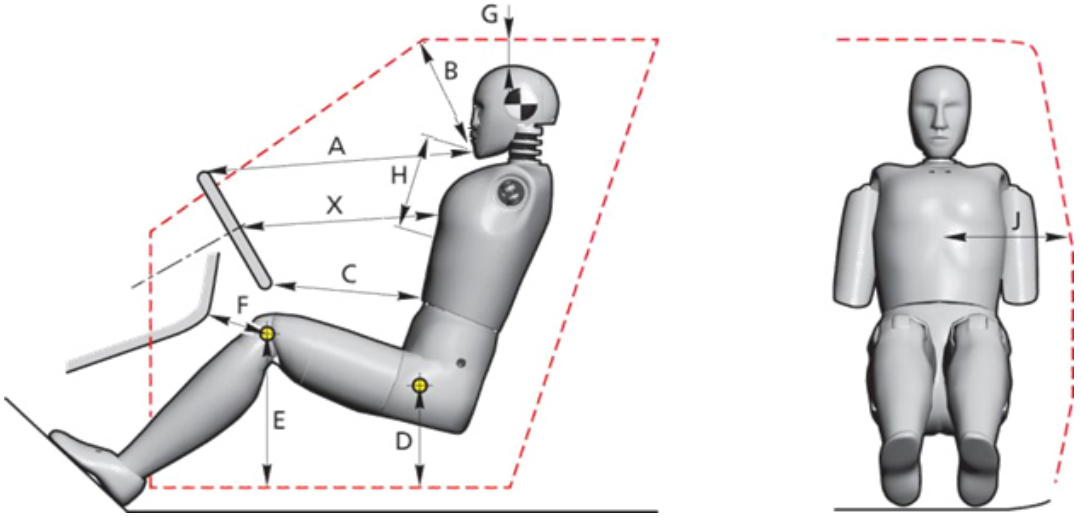

Figure 3 Dummy measurements

Driver		**Passenger**	
A	Chin to top of rim	A	Chin to facia
B	Chin to top edge of glass	B	Chin to top edge of glass
C	Stomach to rim	C	Stomach to facia*
D	H-point to top of sill	D	H-point to top of sill
E	Knee bolt to top edge of sill	E	Knee bolt to top edge of sill
F	Knee bolt to top edge of bolster	F	Knee bolt to top edge of bolster*
G	Head to roof surface	G	Head to roof surface
H	Chin to webbing (vertically)	H	Chin to webbing (vertically)
J	Belt webbing to door (horizontally)	J	Belt webbing to door (horizontally)
θ	Neck Angle	θ	Neck Angle

Driver		**Passenger**	
	H-Point Co-ordinates (to vehicle)		H-Point Co-ordinates (to vehicle)
α	Seat back angle (as defined by torso angle)	α	Seat back angle (as defined by torso angle)
β	Head		NA
γ	T1 neck		NA
δ	Thorax		NA
ε	Pelvis (x and y)		NA

7 BARRIER AND TROLLEY

The trolley will be fitted with the Progressive Deformable Barrier (PDB) conforming to the specifications of Euro NCAP Technical Bulletin TB022, see Figure 4.

7.1 Trolley Preparation

7.1.1 The mobile progressive deformable barrier (MPDB) includes both an impactor and a trolley.

7.1.2 The total mass shall be 1400 ± 20kg.

7.1.3 The centre of gravity shall be situated in the longitudinal median vertical plane within 10mm, 1000 ± 30mm behind the front axle and 500 ± 30mm above the ground.

7.1.4 The distance between the front face of the impactor and the centre of gravity of the barrier shall be 2290 ± 30mm.

7.1.5 The height of the barrier shall be such that the lowest part of the front face of the barrier is 150mm ± 5mm above ground level measured statically prior to impact.

7.1.6 The outboard edge of the MPDB must be 850 ± 10mm from the centreline of the trolley.

7.1.7 The front and rear track width of the trolley shall be 1500 ± 10mm.

7.1.8 The wheelbase of the trolley shall be 3000 ± 10mm.

7.1.9 The interface plate between the deformable barrier face should be 1700mm wide and 650mm high

7.1.10 The trolley may be fitted with an emergency abort system. This is optional, the test facility may elect to test without an abort system.

7.1.11 Inflate all tyres of the trolley to the same pressure.

7.1.12 Measure the wheelbase of the trolley, left and right.

7.1.13 Ensure that the weight distribution is as even as possible left to right.

7.1.14 Record in the test details the final weights measured at each of the wheels.

7.1.15 The trolley construction should be such that there are no structures above the barrier face upper mounting flange that are likely to be contacted by the vehicle.

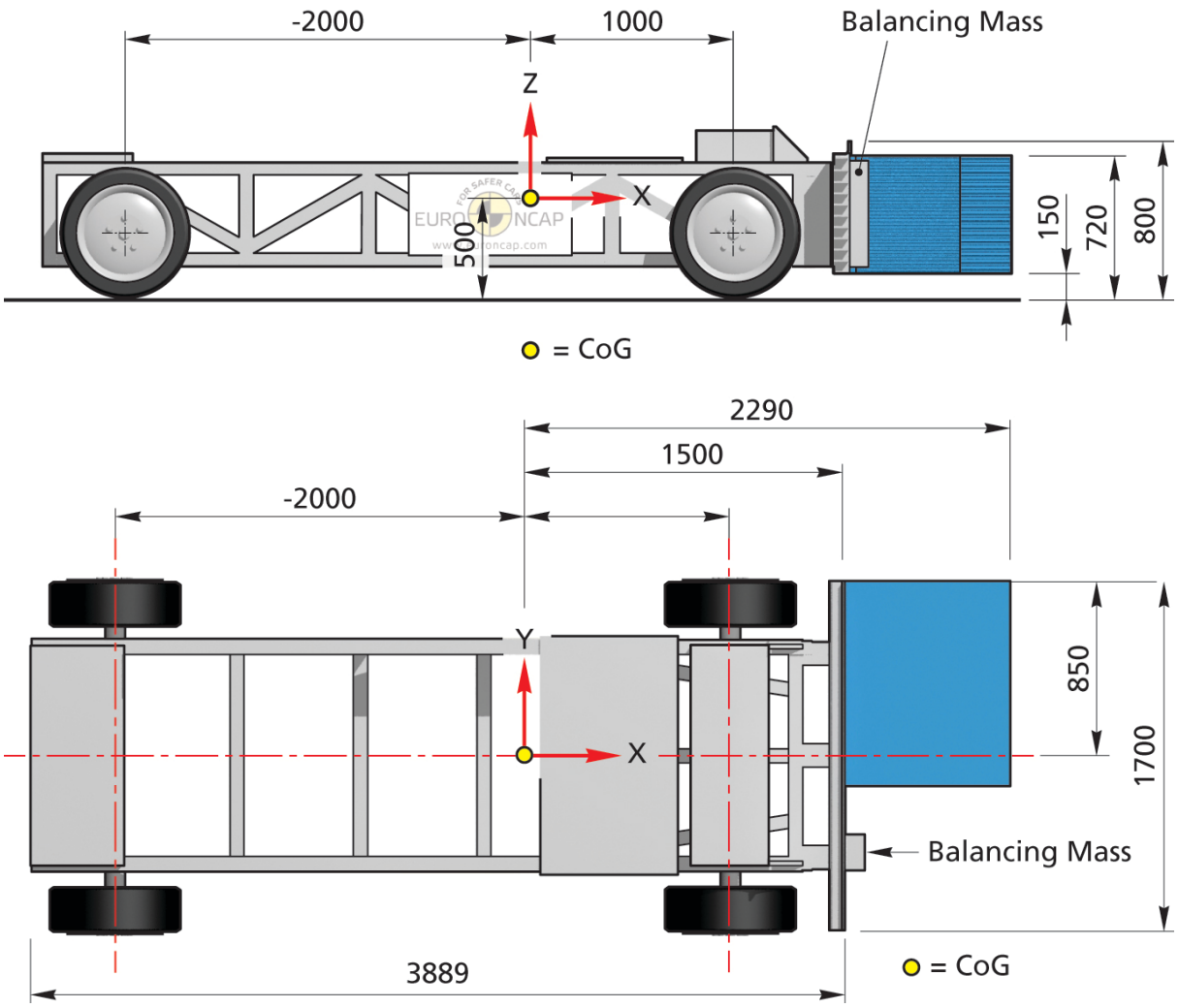

Figure 4 MPDB trolley

8 BARRIER FACE MEASUREMENT

For measuring the deformation of the PDB barrier a 3D measuring system shall be used (e.g. 3D measurement arm with attachable scan module). This system must be capable of recording three dimensional co-ordinates of single points, as well as clouds of points (scanner). A tolerance of **+/- 1mm** is applicable to such a system.

8.1 Before Test

8.1.1 Measure the four corner points of the undeformed barrier front plane.

8.1.2 Set up an axis system using the following elements:
- Point (point of origin): Lower right corner (seen from direction of motion)
- Vector (Y): from the left lower corner point to the right lower corner point
- Plane (YZ): best-fit plane from all four corner points

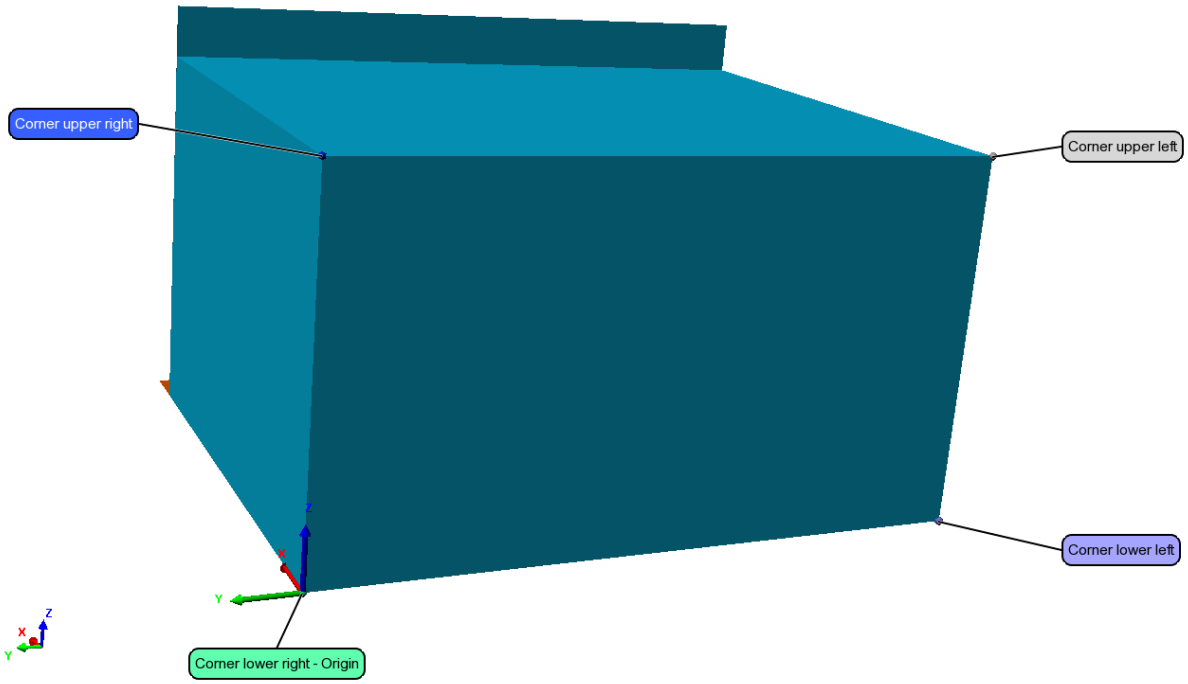

8.1.3 Mark and measure at least four reference points each on the left and right side of the barrier back plate where the sheet metal is folded up to build a stiff border. The points shall be spread over the whole length of the border and placed in different height levels to allow a proper realignment of the measurement system after crash.

8.1.4 Mark and measure at least four reference points on the non-struck side rear honeycomb layer.

8.2 After Test

8.2.1 If the vehicle and barrier face are still connected, care must be taken to separate the two with minimal deformation of the honeycomb. If the two cannot be separated without deforming the honeycomb, remove the barrier from the trolley and try to manoeuvre the barrier face to make separation easier. If this is not successful, vehicle structures should be removed, such as the longitudinals and cross beam. It may be necessary to remove the front wheels and side wing to gain better access to the vehicle structures.

8.2.2 Clean the surface of the barrier from fluids, rough dirt, glass, plastic pieces, loose tape, etc.

8.2.3 Eliminate mechanical artefacts:

In some cases it might be that deformation has occurred that was not caused by the impact but would influence the results in an undesired way. These artefacts should be corrected and documented before the final scan of the barrier surface.

8.2.3.1 In case of different honeycomb layers separating at the adhesive joints, try to bring them back in contact without further deformation of the honeycomb structure (e.g. with the help of a ratchet strap). To make this easier, remove the cover sheet metal from top and bottom of the barrier.

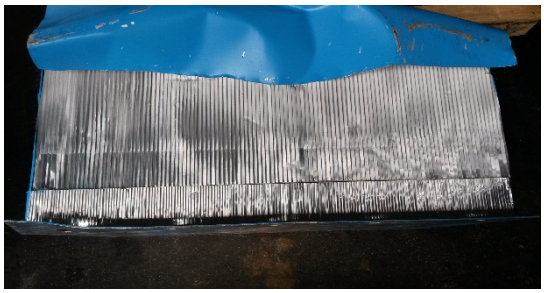

8.2.3.2 It may be that the cover sheet metal is bent outward due to car parts getting hooked during rebound (this usually happens at borders of holes punched in by longitudinal beams). In this case, reform the cover sheet metal to match to the contour of the honeycomb.

8.2.3.3 Sometimes parts of the longitudinal beams may get stuck in the barrier. In this case the barrier scan may be split up in two or more segments. First scan the barrier surface as far as possible without needing to remove the part of the car. Then

carefully remove the part with as little influence on the original barrier surface as possible. After that scan the bottom of the hole that is now accessible.

8.2.3.4 Cracks that are obviously not caused by intrusion shall be filled with clay before scanning (from edge to edge of the cover sheet metal).

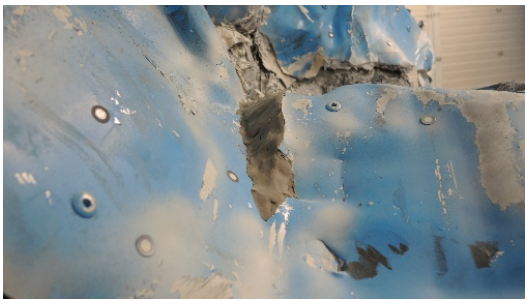

8.2.4 Where necessary paint any areas of bare metal on the surface (e.g. with bright priming coat) to enhance scanning quality in these areas.

8.2.5 Align the barrier to the measurement system with the help of the eight reference points (left and right side of the flange plate) measured before crash. If the honeycomb has separated from the backplate, the reference points on the unstruck side of the rear honeycomb layer described in 8.1.4 should be used.

8.2.6 Scan the barrier surface to get a point cloud of the deformed surface. An area of the size of the undeformed barrier surface (projected to the deformed barrier surface in X direction) is sufficient.

8.2.7 Create a mesh from this point cloud. As parameter a maximum edge length of 10mm shall be used. If available, medium smoothing and data reduction can be applied.

8.2.8 Create a grid of points with an equal distance of 20mm centered on the undeformed barrier surface. This will be a number of 1400 points in total.

Grid1 X=0 Y=10 Z=10	Grid2 X=0 Y=30 Z=10	……..	Grid50 X=0 Y=990 Z=10
Grid51 X=0 Y=10 Z=30	Grid52 X=0 Y=30 Z=30	……..	Grid100 X=0 Y=990 Z=30
……..	……..	……..	……..
……..	……..	……..	……..
Grid1351 X=0 Y=10 Z=550	Grid1352 X=0 Y=30 Z=550	……..	Grid1400 X=0 Y=990 Z=550

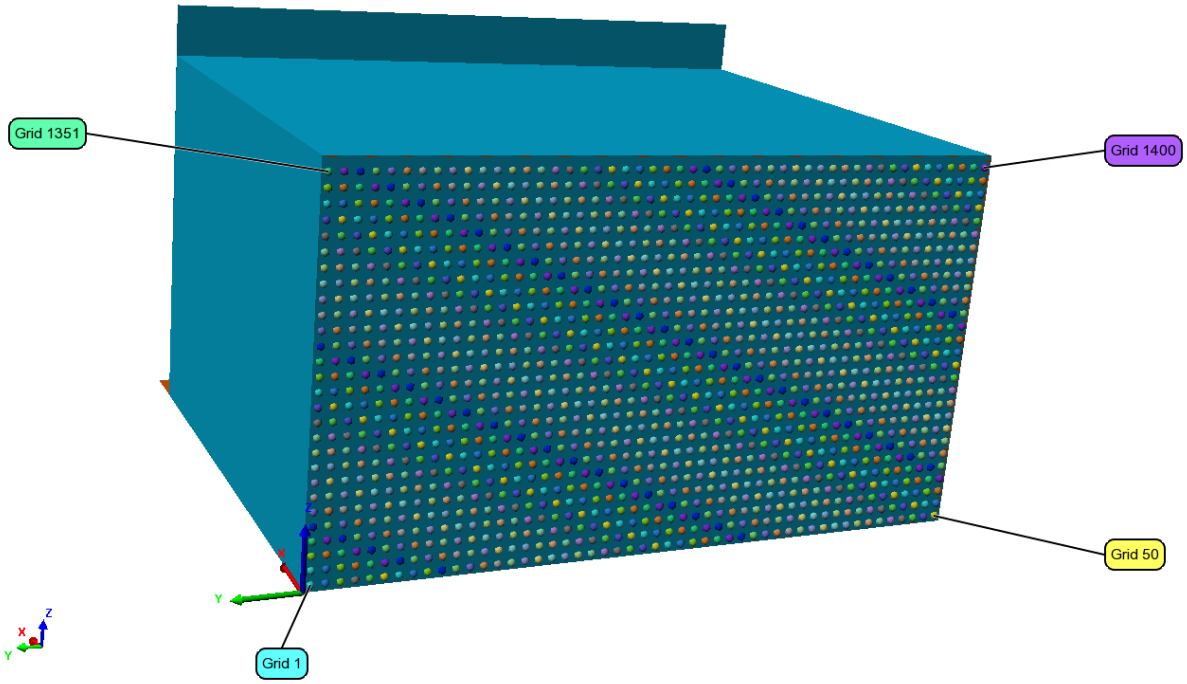

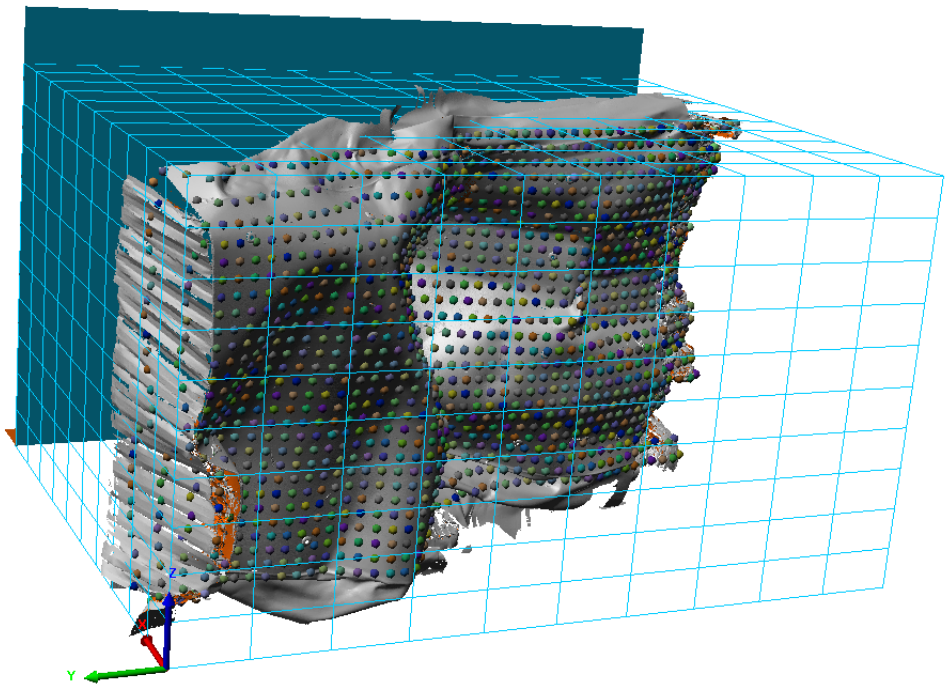

8.2.9 The grid points shall be projected on the mesh of the scanned barrier surface along the X axis.

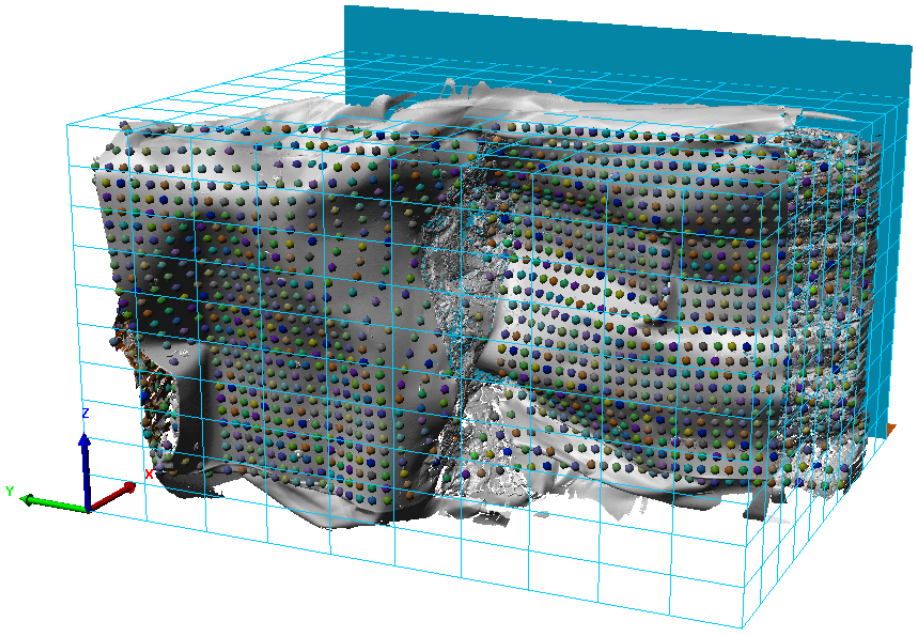

8.2.10 It may be that some points do not hit the mesh (e.g. because of holes in the mesh). This can be ignored if the points are not in the assessment area. Points in the assessment area should be placed as close as possible to the desired position by considering the X value of the neighbouring grid points or the surrounding mesh surface.

8.2.11 Finally, the co-ordinates of the grid points should be exported to the assessment file.

9 TEST PARAMETERS

9.1 Test set-up

An on-board data acquisition unit will be used. This equipment will be triggered by a contact plate at the point of first contact (t=0) and will record digital information at a sample rate of 20kHz (alternatively a sample rate of 10kHz may be used). The equipment conforms to SAE J211.

BEFORE THE TEST, ENSURE THAT THE LIVE BATTERY IS CONNECTED, A SINGLE KEY IS IN THE IGNITION, THE IGNITION IS ON AND THAT THE AIRBAG LIGHT ON THE DASHBOARD ILLUMINATES AS NORMAL (WHERE FITTED).

If the vehicle is fitted with a suspension system, pedal retraction system or any other system which requires running of the engine just before test execution, the engine should be run for a predetermined time, specified by the manufacturer.

9.2 Impact Speed

9.2.1 Measure the speed of both the test vehicle and the trolley as near as possible to the point of impact.

9.2.2 Record the actual test speeds in the test details.

TARGET SPEED FOR VEHICLE AND TROLLEY = 50km/h ± 1km/h

9.3 Post-Impact Braking

9.3.1 A method may be employed to prevent secondary impacts from the rebounding vehicle or trolley. This may be an emergency braking system on the vehicle and trolley or another method, but must only be activated only after the first impact is complete.

9.3.2 Do NOT start the braking at the point of initial impact.

9.3.3 The OEM will be asked to supply an OLC curve for the vehicle. Braking must NOT begin until 100ms after the vehicle velocity has reached zero.

9.4 Impact Angle

9.4.1 Measure the impact angle of both the test vehicle and the trolley as near as possible to the point of impact.

9.4.2 Record the actual angle in the test details.

9.4.3 TARGET IMPACT ANGLE = 0 degrees ± 2 degrees

9.5 Alignment

9.5.1 With the vehicle offered up against the barrier, tape a small rivet as near as possible to the edge of the deformable barrier which is to be struck.

9.5.2 Mark the point on the bumper of the vehicle where the pin would strike if an exact overlap of 50% of the vehicle width was achieved.

9.5.3 After the test, if the mark made by the pin is not within the tolerance square detailed below, film analysis will be used to try to assess the alignment. Both the horizontal

and vertical alignments shall be noted in the test report.

9.5.4 TARGET OVERLAP = 50% ± 25mm

9.5.5 TARGET VERTICAL ALIGNMENT = ± 25mm

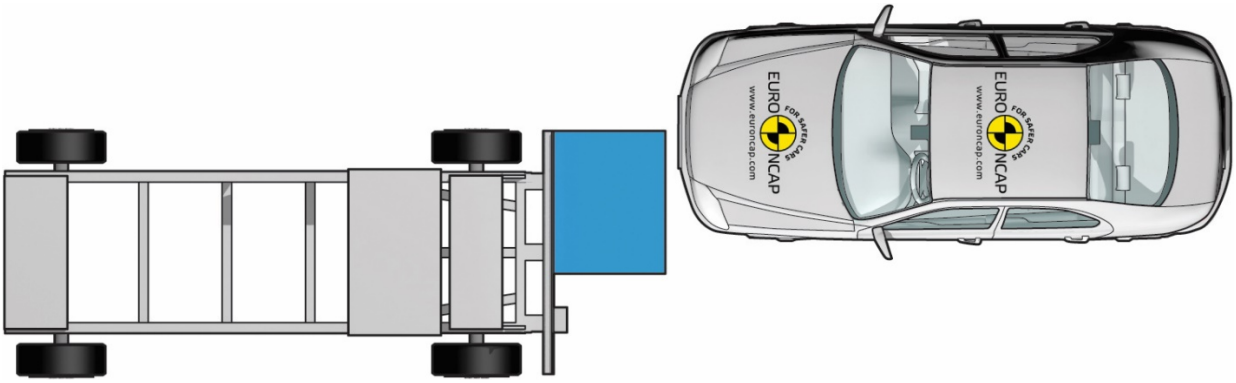

Figure 5 MPDB test set-up

9.6 After Test

9.6.1 Refer to the Rescue and Extrication protocol for further details of post-test assessment.

9.7 Dummy Removal

9.7.1 Do not move the driver or passenger seats. Try to remove the dummies.

9.7.2 If the dummies cannot be removed with the seats in their original positions, recline the seat back and try again. Note any entrapment of the dummies.

9.7.3 If the dummies can still not be removed, try to slide the seats back on their runners.

9.7.4 If the dummies can still not be moved, the seats can be cut out of the car.

9.7.5 Record the method used to remove the dummies.